Zilver Bali Long Basin Mixer 1/2

Item Code : **ZBLI100**

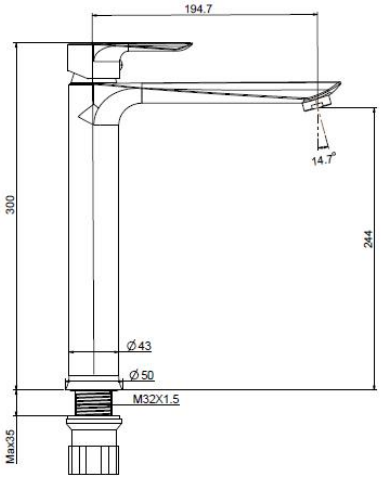

Basic information:

Conventional geometric shape with softer edges made it a very versatile style.

- For Single Hole Installation
- Cartridge : 35 mm Ceramic with Brass Stick inclusive of
- Flexible Connection hoses with brass nuts
- Aerator @2.2 gpm max. @60psi
- Chrome plating 0.2-0.3 micrometer
- Nickel Plating 8-10 micrometer
- Minimum pressure 0.1 mpa /14.5psi/ 1bar

www.zilver.co